ITEM	Title		QTY.			
1	Aandrukvinger tip 18.4mm		1			
2	Aandrukstift 40mm		1			

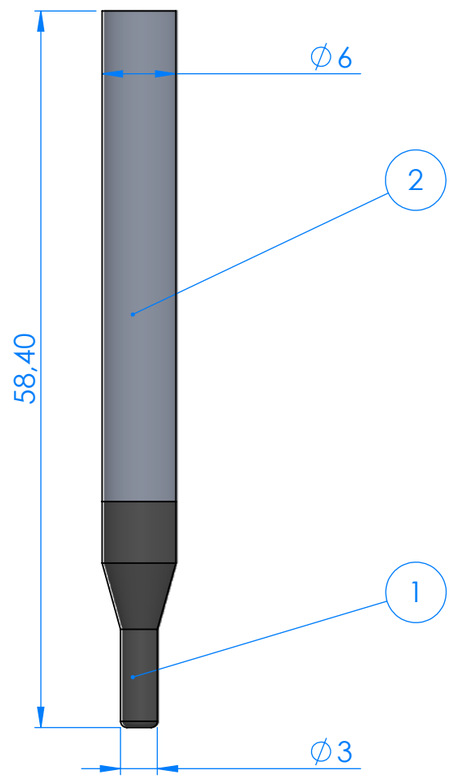

ROMEX

Created by:	Tim Vriens
Creation date:	12-5-2020 07:38:26
Last save date:	17-11-2020 14:42:58
REVISION:	A
MATERIAL:	

CUSTOMER:	Romex BV
TITLE:	Aandrukvinger 58.4mm 6TL
P/N:	40330091

TOLERANCES AND DIMENSIONS (unless otherwise specified) ACCORDING TO: DIN ISO-2768-fh

Size A3

SCALE: 2:1 | WEIGHT: | UNITS: mm, gram | SHEET 1 OF 1